DRAWING FOR CUSTOMER

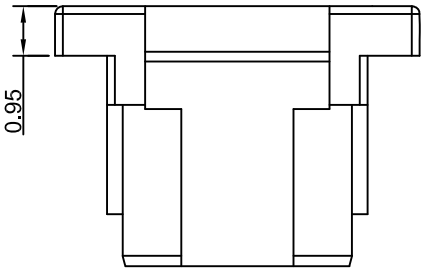

KB901- XX H B L X A

- Pin No.
- Housing
- Back buckle
- With Lock
- Mold No.
- Version

■Specifications:
- ●Rated Voltage: 30V AC,DC
- ●Rated Current: 1A AC,DC
- ●Withstand Voltage: 500V AC/minute
- ●Contact Resistance: 20mΩ, (MAX.)
- ●Insulation Resistance: 100MΩ, (MIN.)
- ●Temperature Range: -25°C~+85°C

■Material and Finish:
- ●Color: natural(white)
- ●Material: PA66 UL94-V0

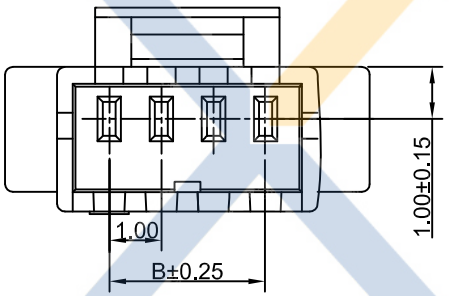

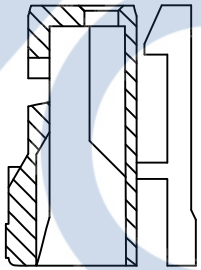

SECTION:(A-A)

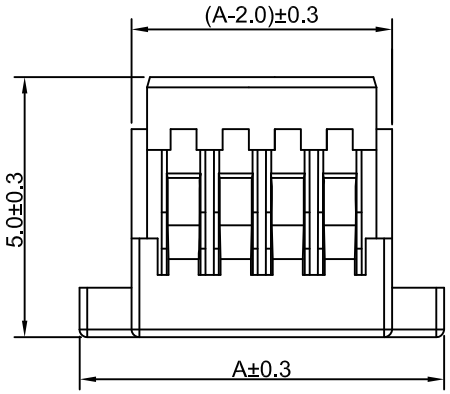

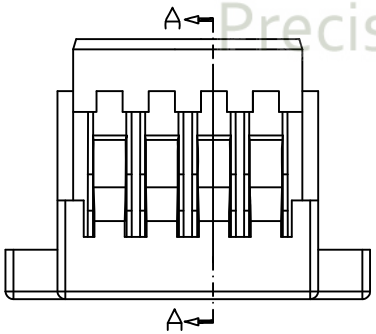

PART NO.	DIMENSION A	DIMENSION B	PART NO.	DIMENSION A	DIMENSION B
02	5.00	1.00	12	15.00	11.00
03	6.00	2.00	13	16.00	12.00
04	7.00	3.00	14	17.00	13.00
05	8.00	4.00	15	18.00	14.00
06	9.00	5.00	16	19.00	15.00
07	10.00	6.00	17	20.00	16.00
08	11.00	7.00	18	21.00	17.00
09	12.00	8.00	19	22.00	18.00
10	13.00	9.00	20	23.00	19.00
11	14.00	10.00			

XYCO Precision Connectors

DATE 日期	VER 版本	CHANGE HISTORY 變更歷史	CHANGED NAME 修改後料號	DRAWING 變更者
2015-08-05	A		KB901-XXHBLXA	譚火秦

TOLERANCE 公 差: .X=±0.30, .XX=±0.20, .XXX=±0.10

DRAWING 設計者: 譚火秦
CHECKED 審查: 彭太坤
APPROVED 核准: 譚宏

KB901-XXHBLXA

PART NO. 料號

DWG NO. 圖號: PE2011A

UNIT 單位: mm

PRODUCT NAME 產品名稱: JST SH1.0mm wire to board Housing with back lock

XYCO PRECISION CONNECTORS
TEL: 0769-8297 9981/2/3 http://www.XYCO.com.cn